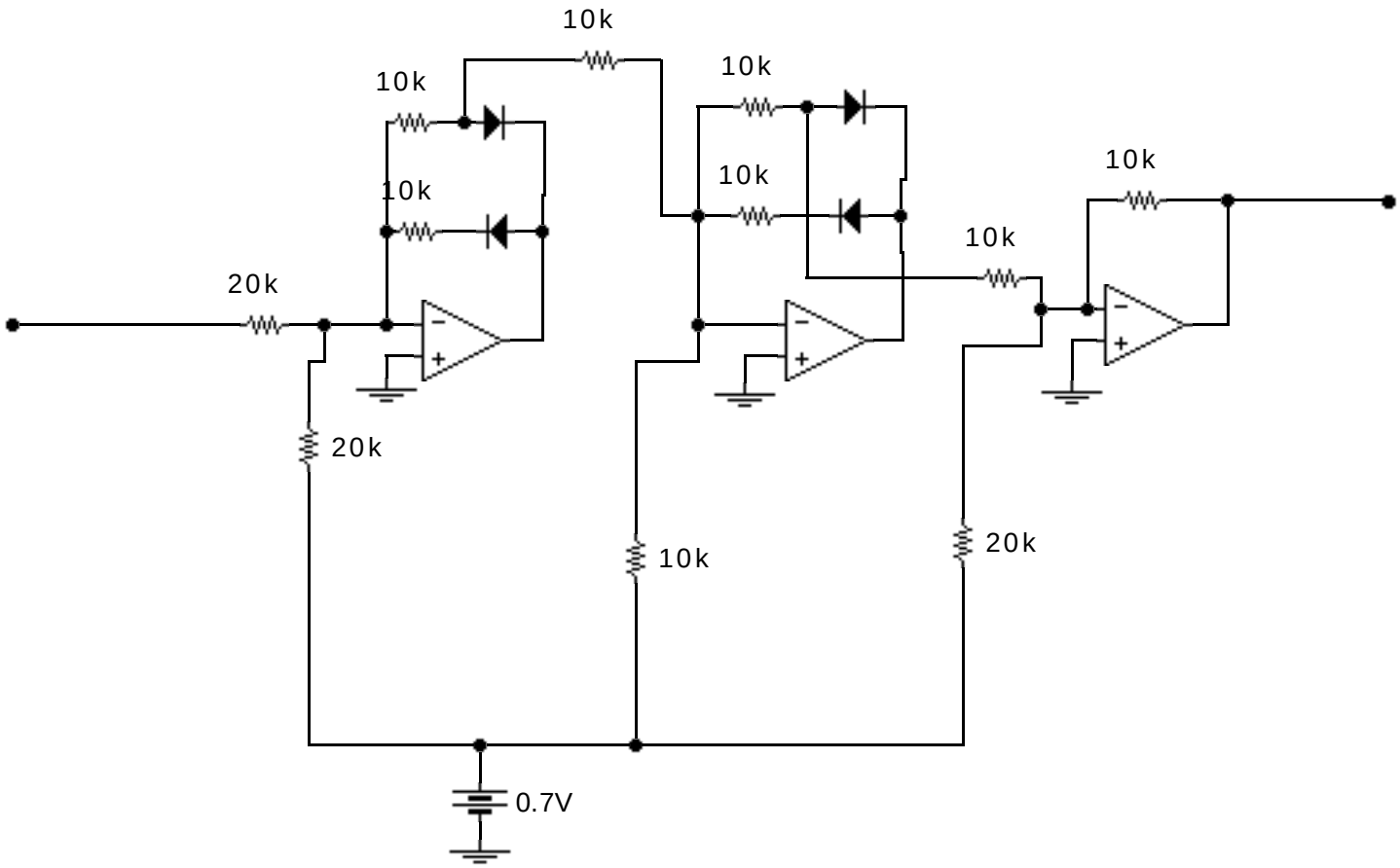
10k
10k
10k
10k
10k
10k
20k
20k
10k
20k
0.7V