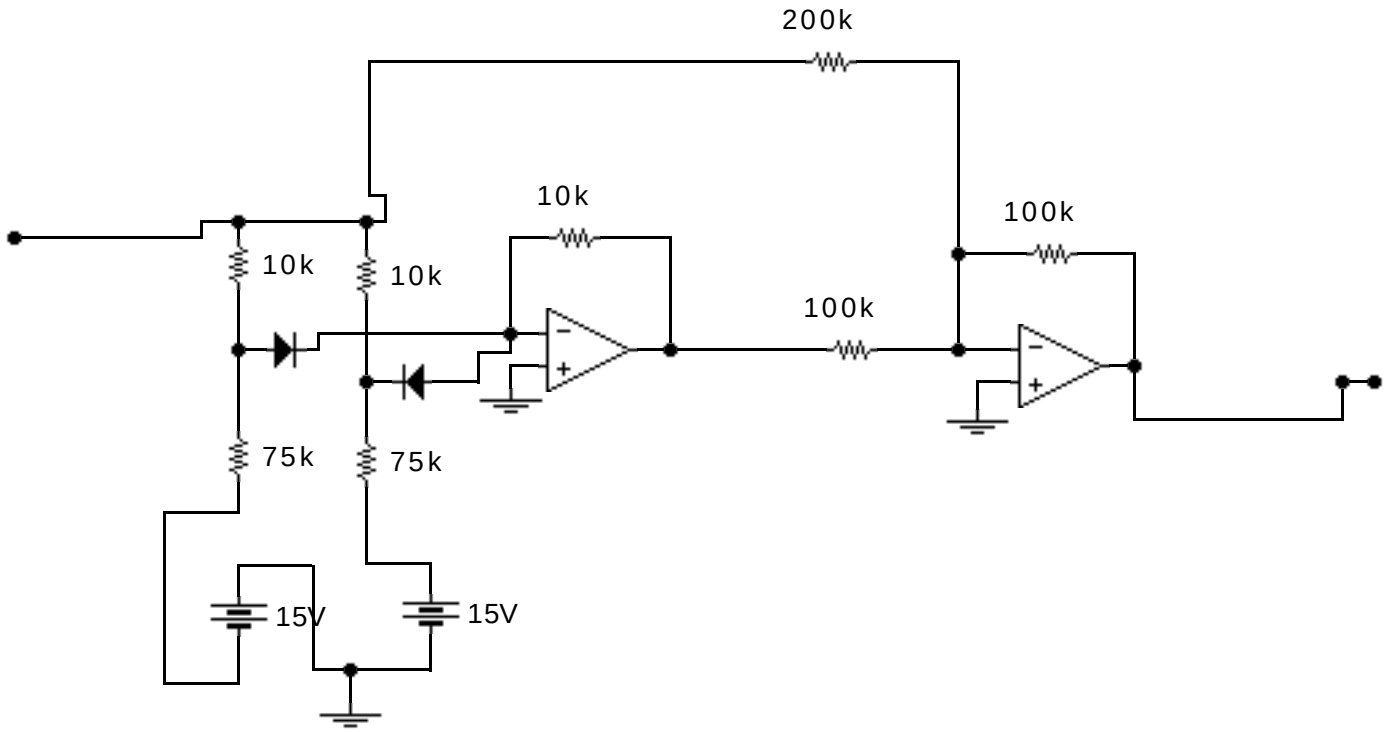
200k
10k
100k
10k
10k
100k
75k
75k
15V
15V