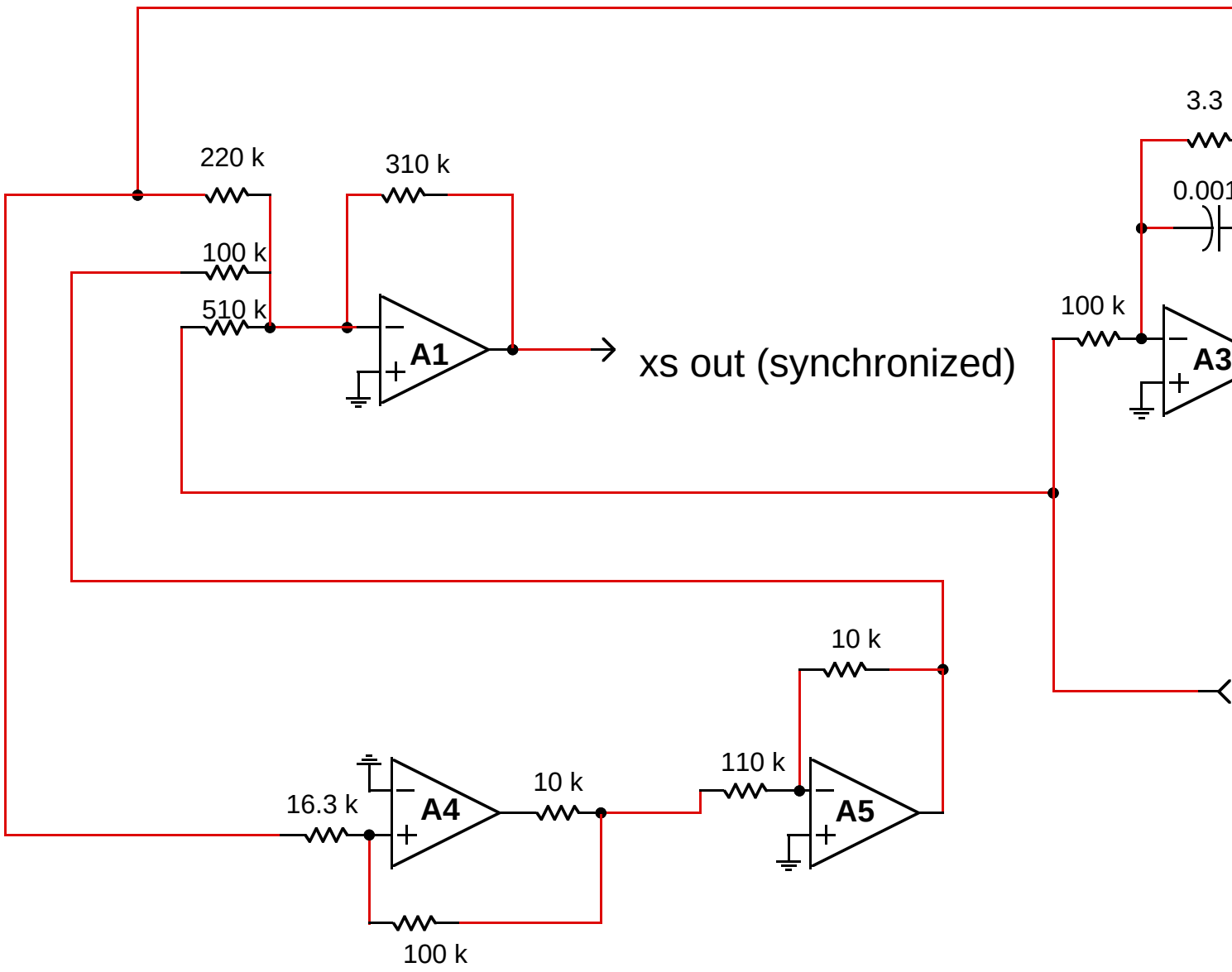
220 k
310 k
100 k
510 k
A1
xs out (synchronized)
3.3
0.001
100 k
A3
10 k
110 k
16.3 k
A4
10 k
A5
100 k

x1 in