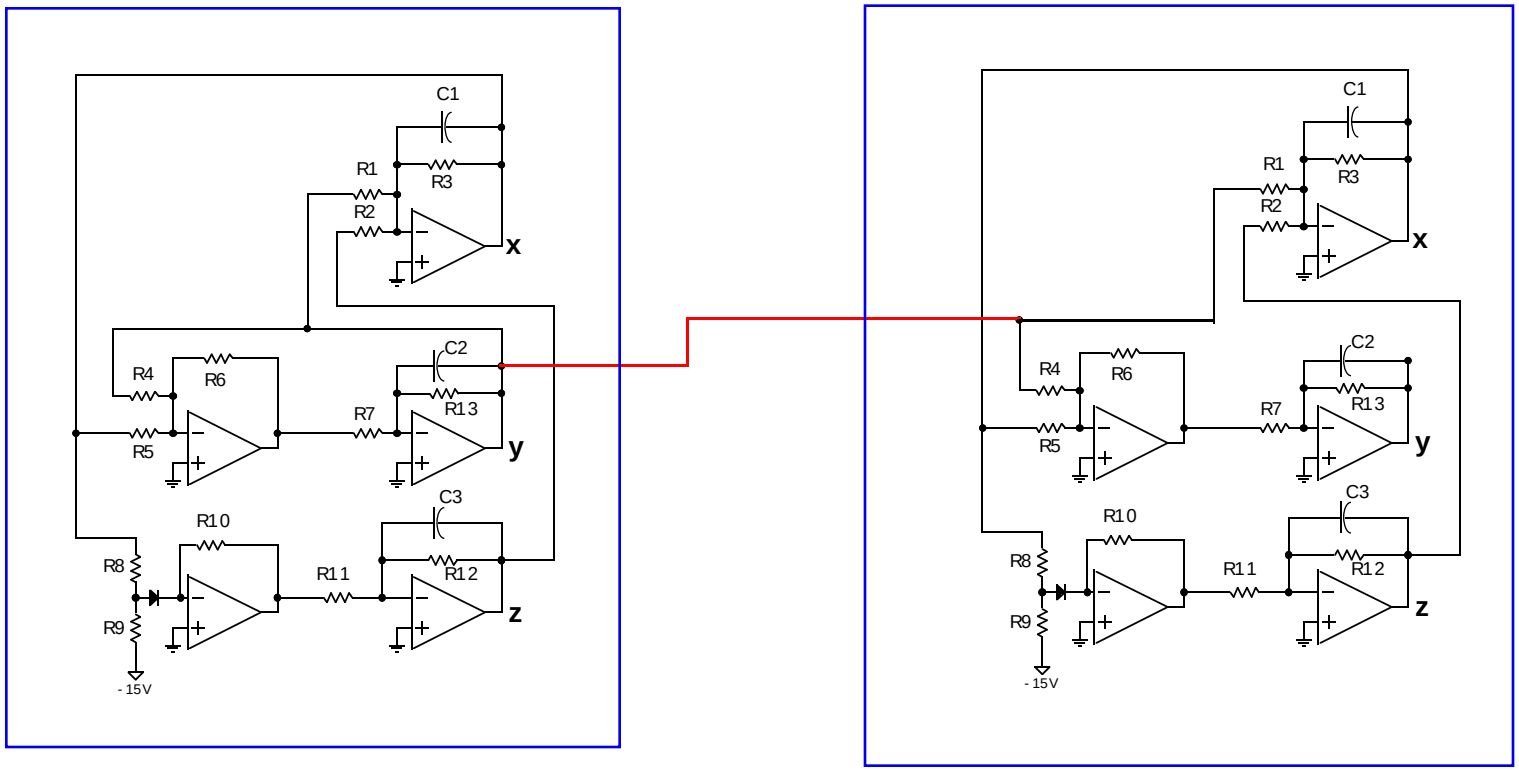

drive

response