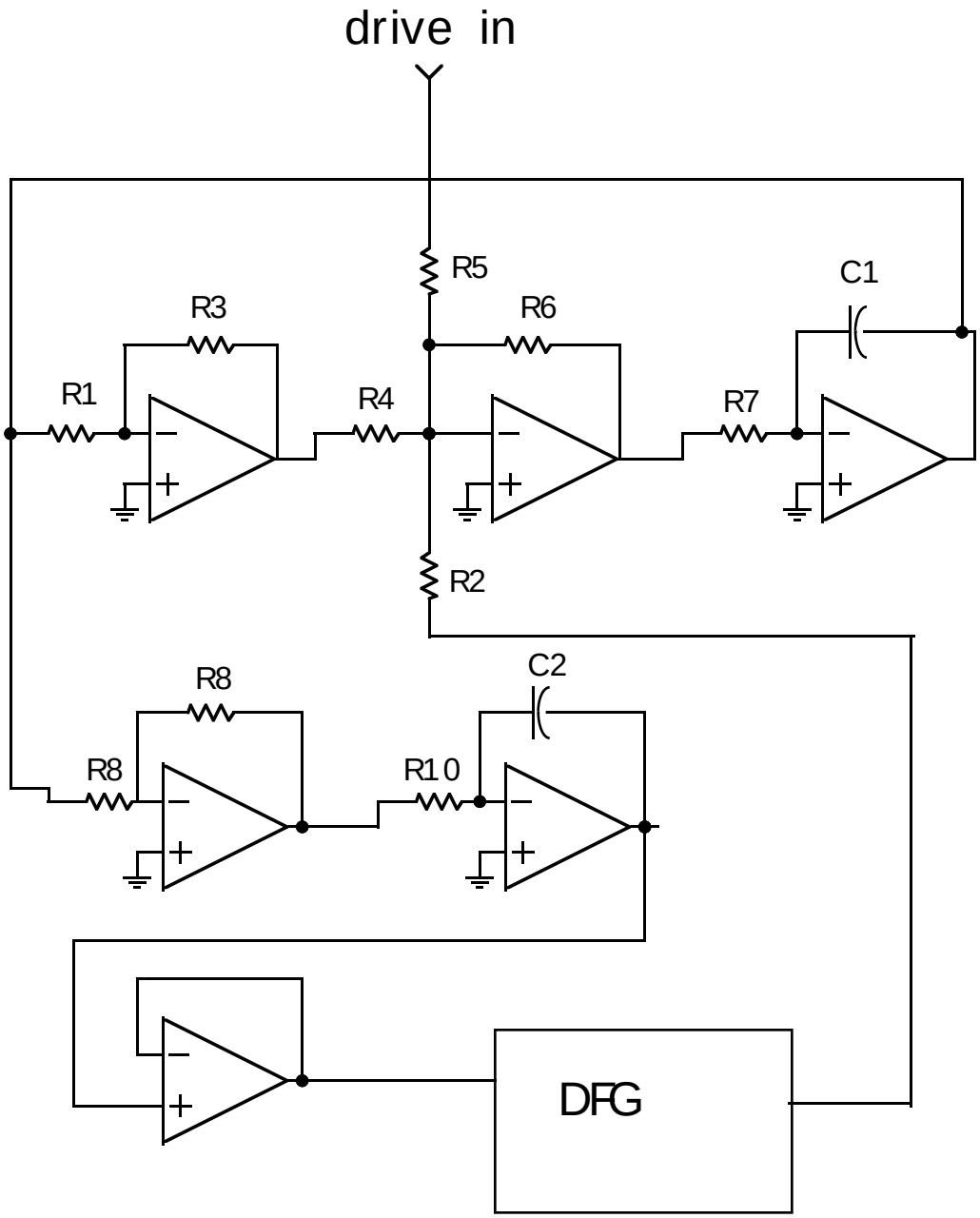
drive in
R5
C1
R3
R6
R1
R4
R7
R2
C2
R8
R8
R10
DFG