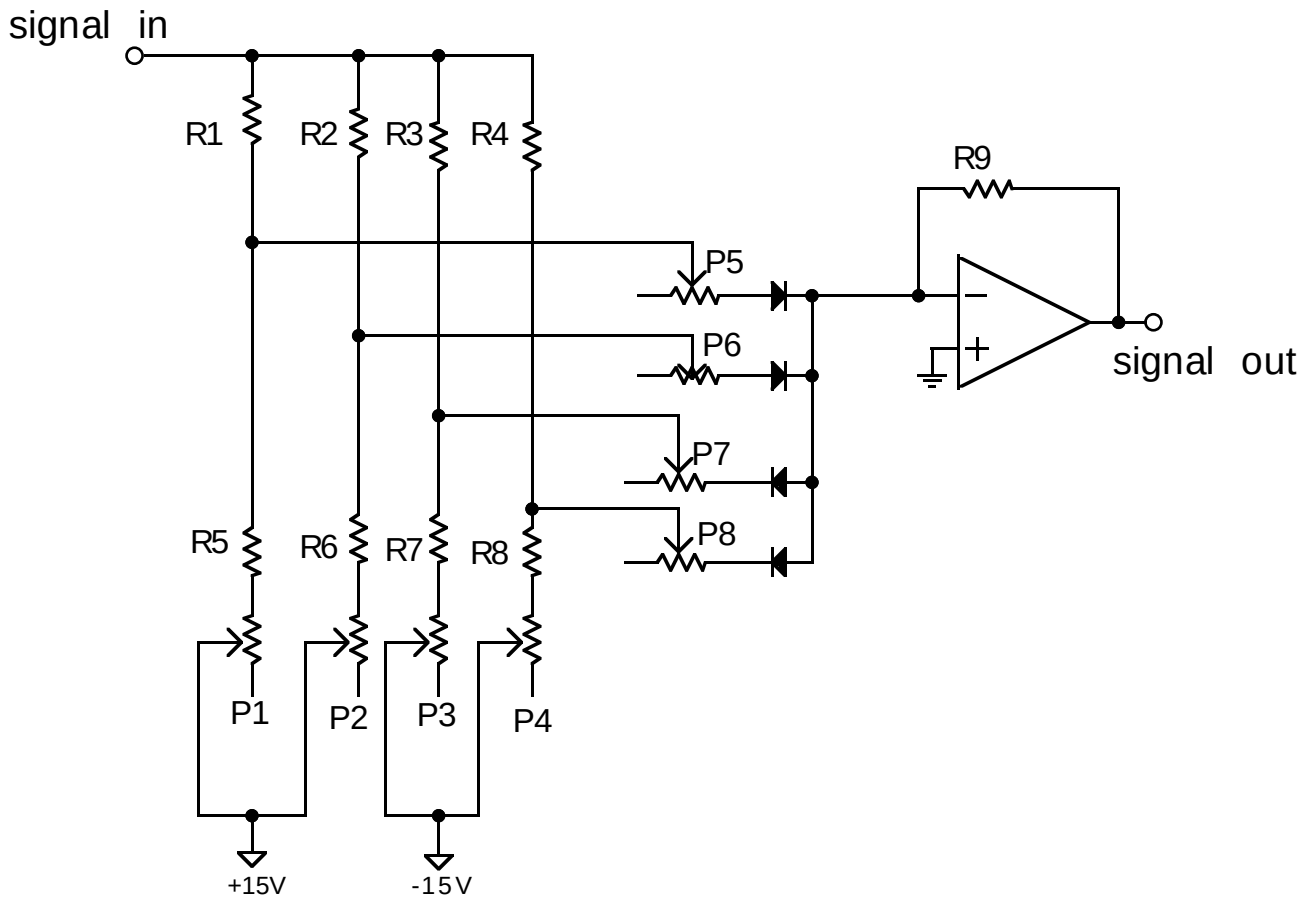
signal in
R1
R2
R3
R4
R9
P5
P6
P7
P8
signal out
R5
R6
R7
R8
P1
P2
P3
P4
+15V
-15V