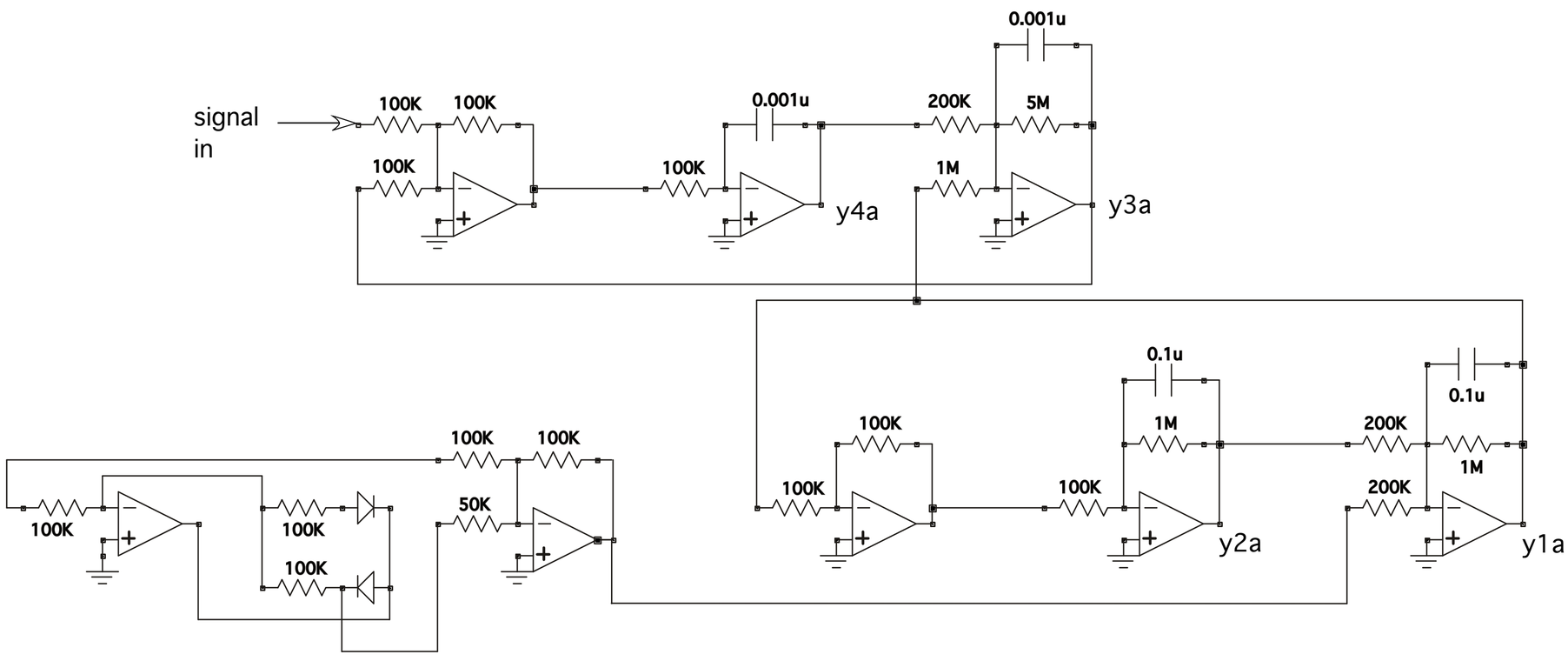Rossler response circuit #2
(auxiliary circuit)
no control