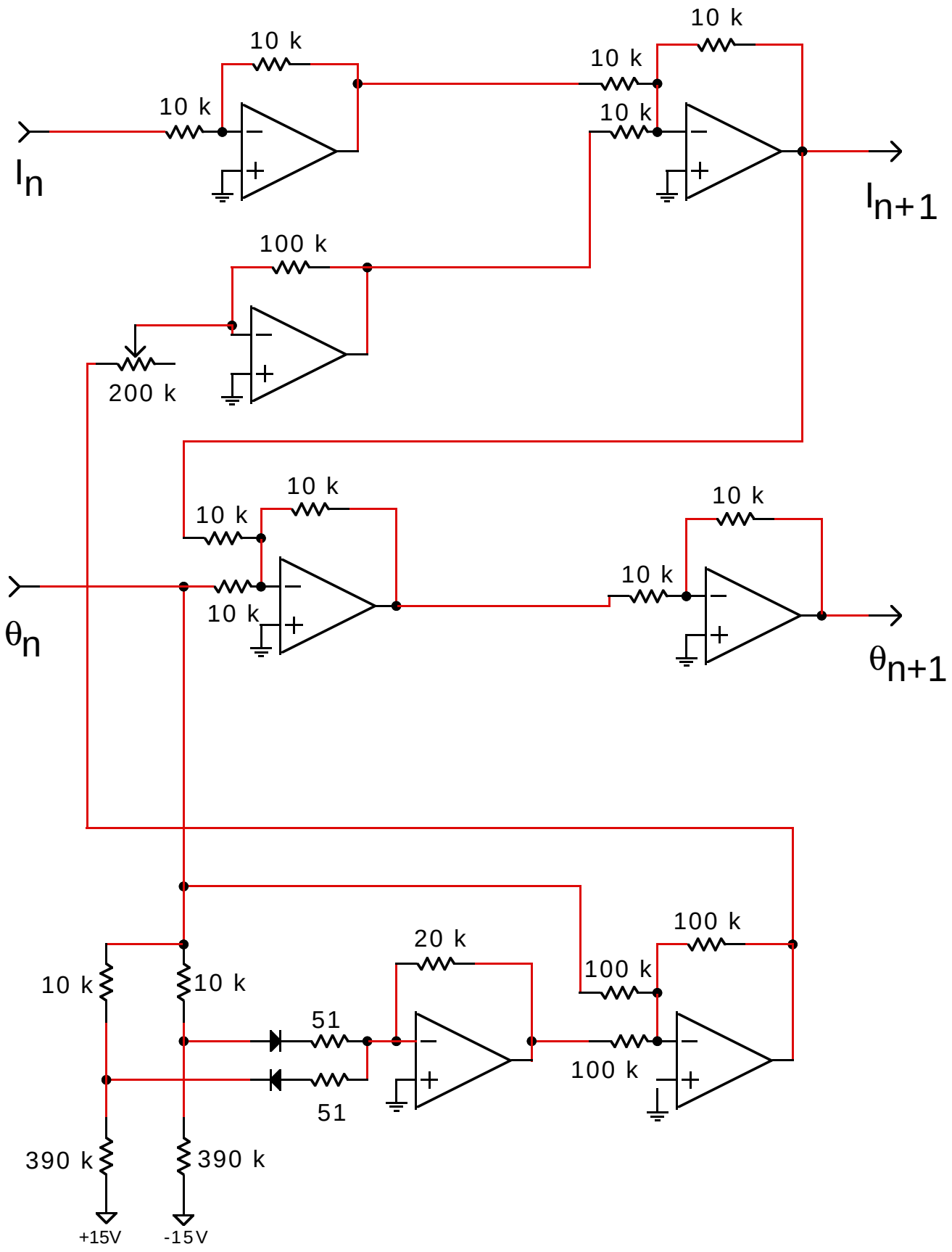
10 k
10 k
10 k
10 k
10 k
I_n
I_{n+1}
100 k
200 k
10 k
10 k
10 k
10 k
10 k
θ_n
θ_{n+1}
100 k
20 k
100 k
10 k
10 k
51
100 k
51
390 k
390 k
+15V
-15V